DRAWING TITLE:	CANDLE
COURSE OR LEVEL:	GRAPHIC COMMUNICATION
CHALLENGE VERSION :	V1_0520
SCALE:	NTS
NOTES:	ELLIPSES ARE FUN, RIGHT? SO ARE SPHERES... OH, AND CAN YOU RENDER THIS WITH A FLAME?

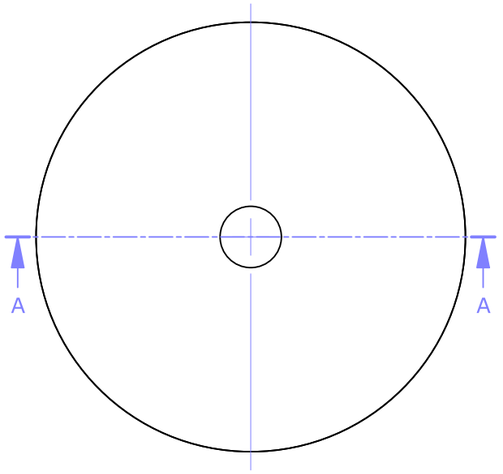

PLAN

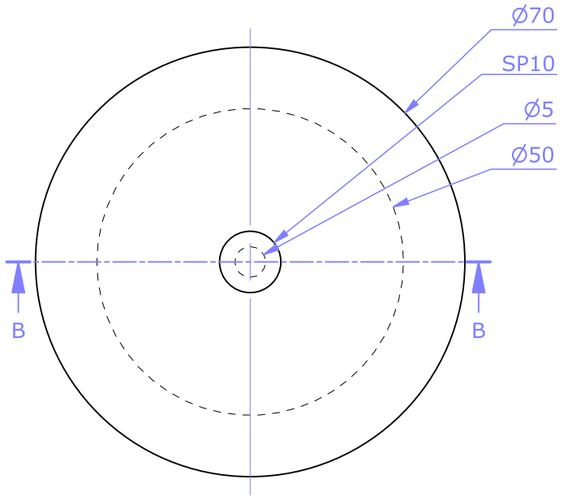

PLAN

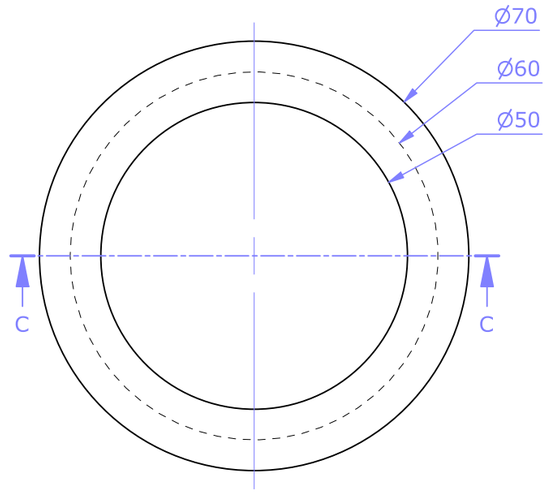

PLAN

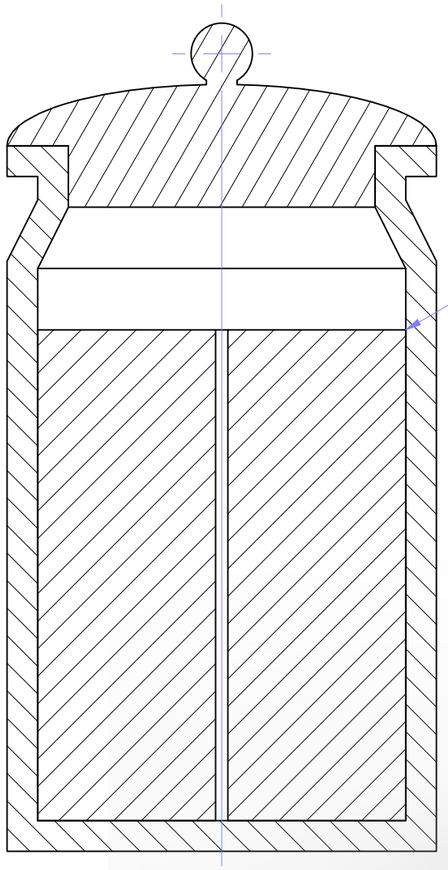

Model your own wax and wick component for the render.

SECTION A-A

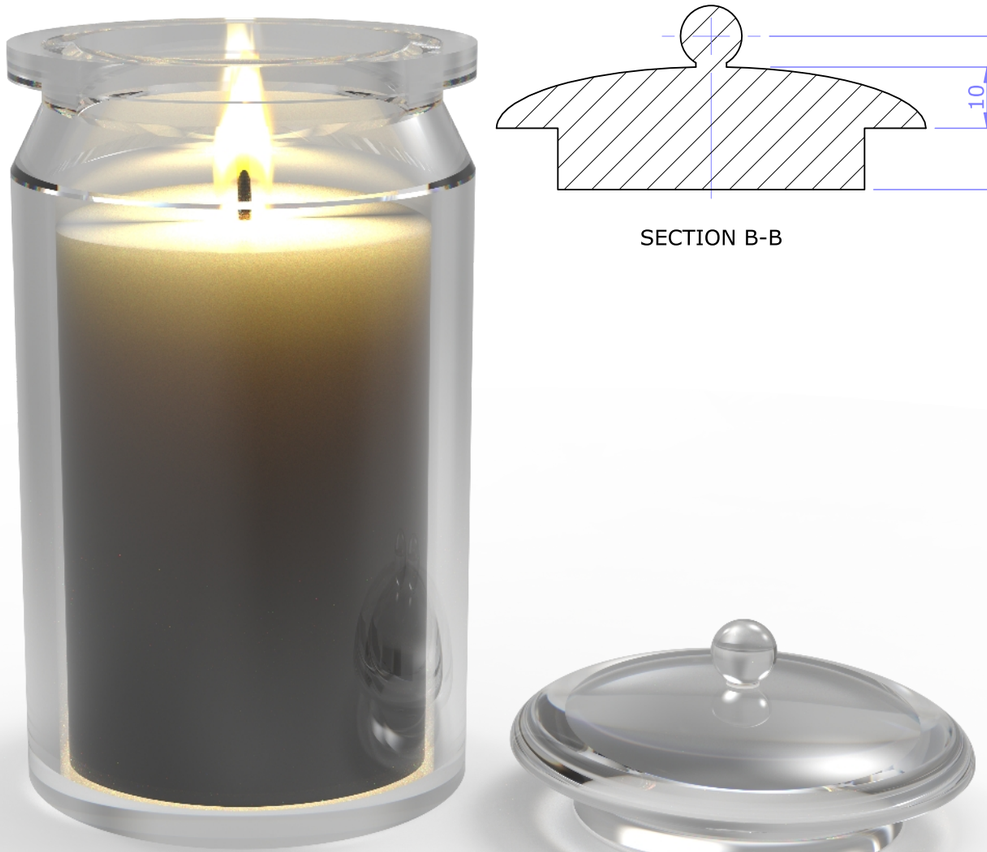

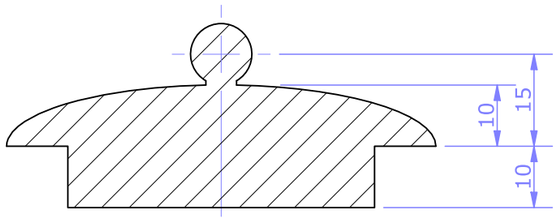

SECTION B-B

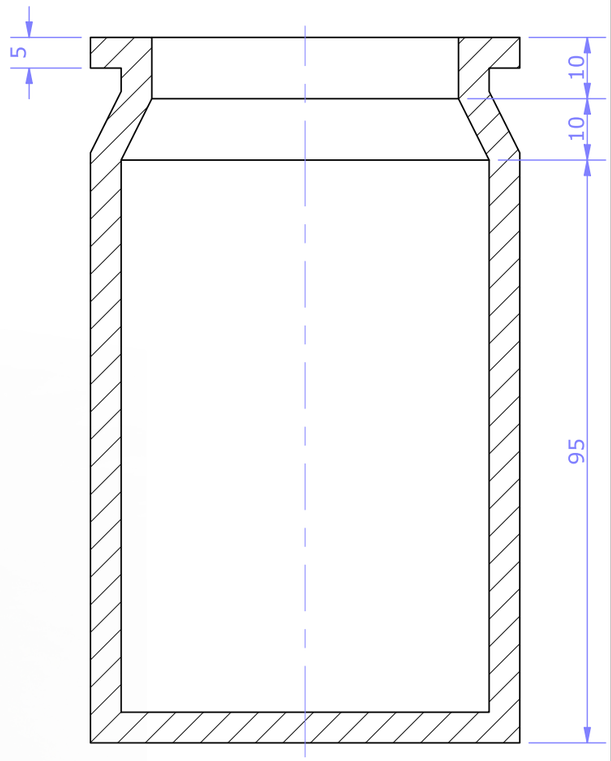

SECTION C-C