DRAWING TITLE:	BUCKET
COURSE OR LEVEL:	GRAPHIC COMMUNICATION
CHALLENGE VERSION :	V1_0520
SCALE:	NTS
NOTES:	CAN YOU GET THE RIDGES CORRECT?

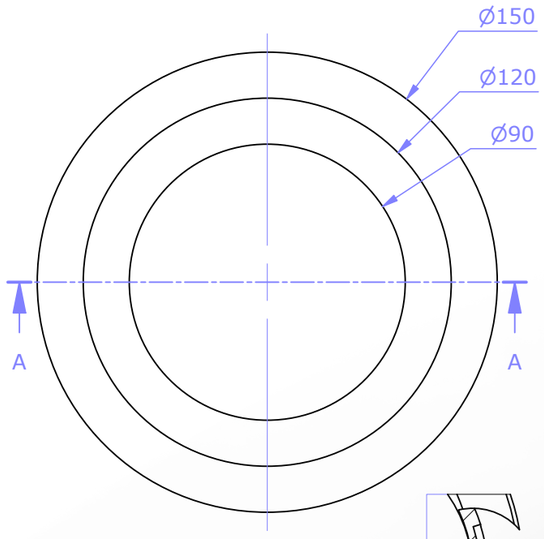

PLAN

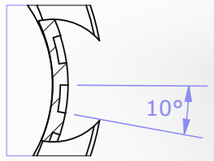

PARTIAL AUXILIARY VIEW C

20 RIDGES ARRAYED

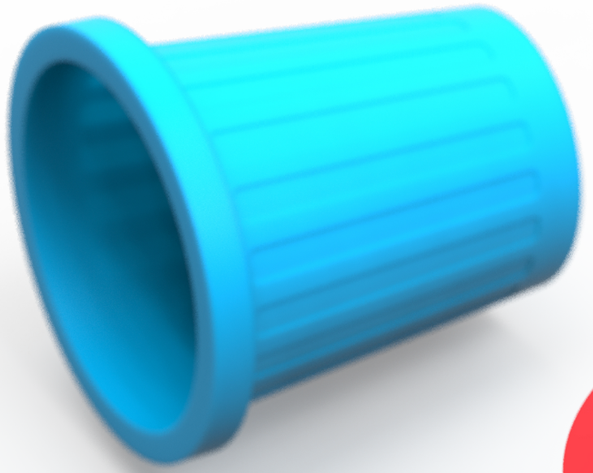

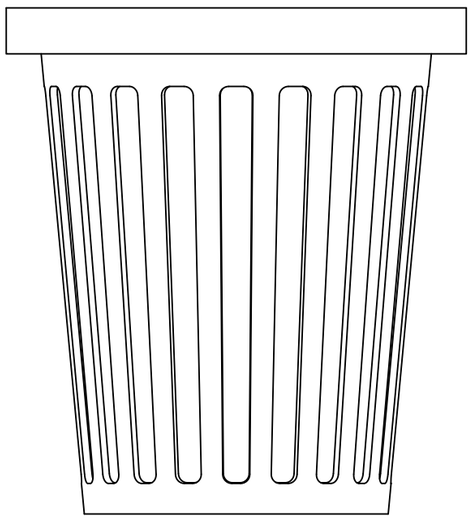

END ELEVATION

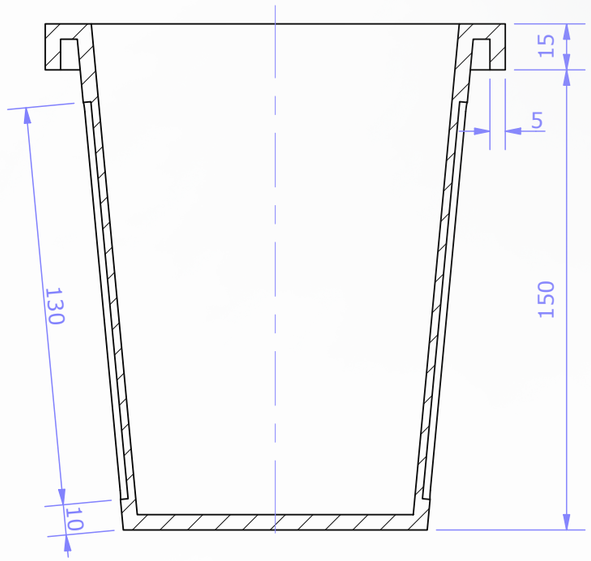

SECTION A-A

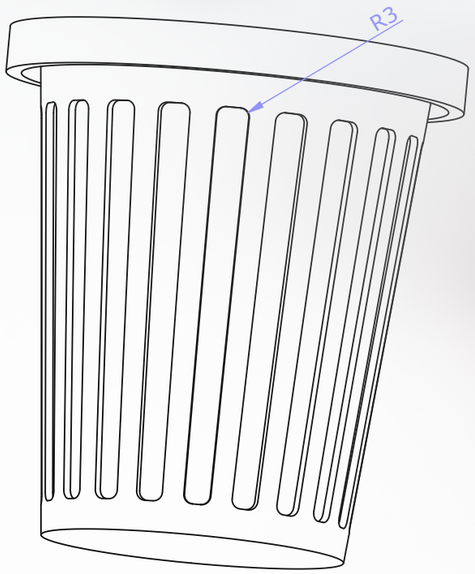

AUXILIARY VIEW B-B