DRAWING TITLE:	PET BOWL
COURSE OR LEVEL:	GRAPHIC COMMUNICATION
CHALLENGE VERSION :	V2_0520
SCALE:	NTS
NOTES:	CAN YOU GET THE HANDLES CORRECT?

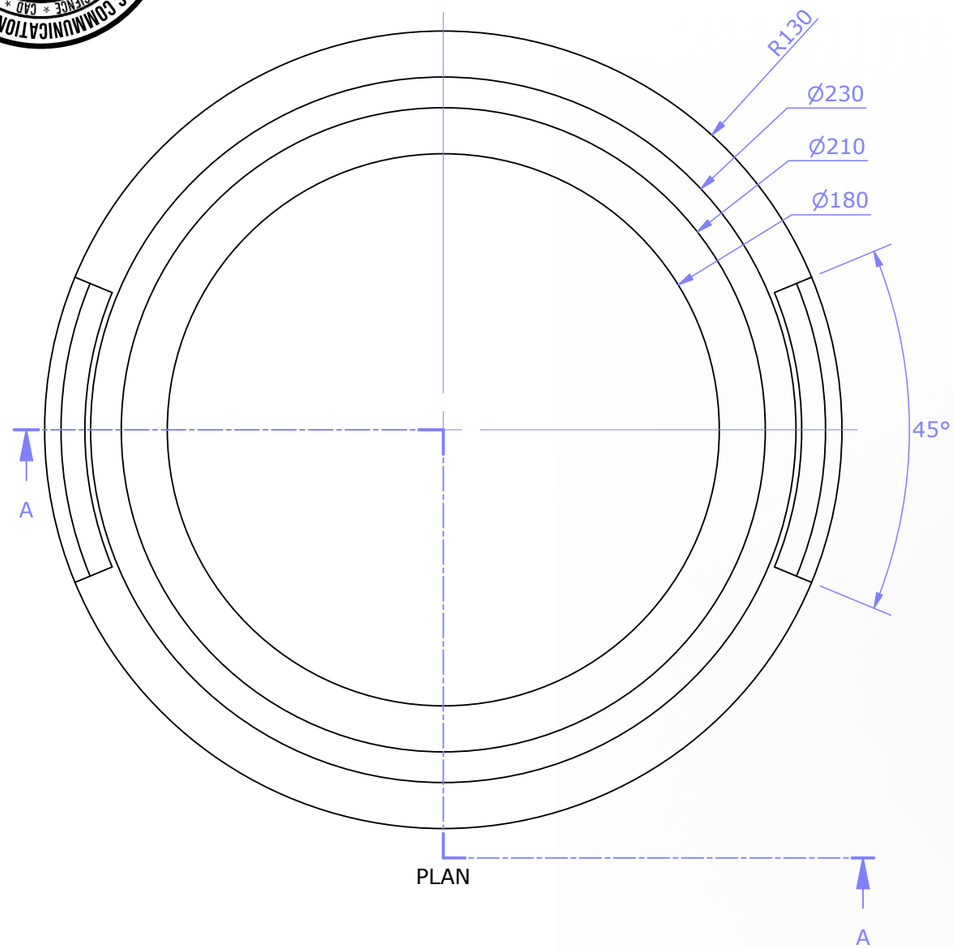

PLAN

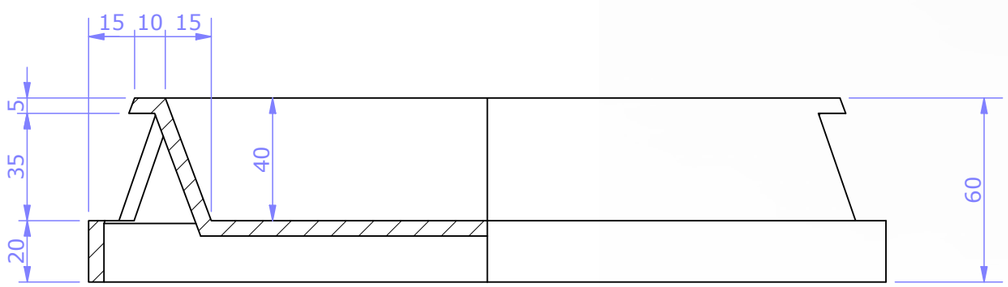

SECTION A-A