DRAWING TITLE:	PENCIL STAND
COURSE OR LEVEL:	GRAPHIC COMMUNICATION
CHALLENGE VERSION :	V1_0520
SCALE:	NTS
NOTES:	UNDERSTAND PITCH-CIRCLE-DIAMETER?

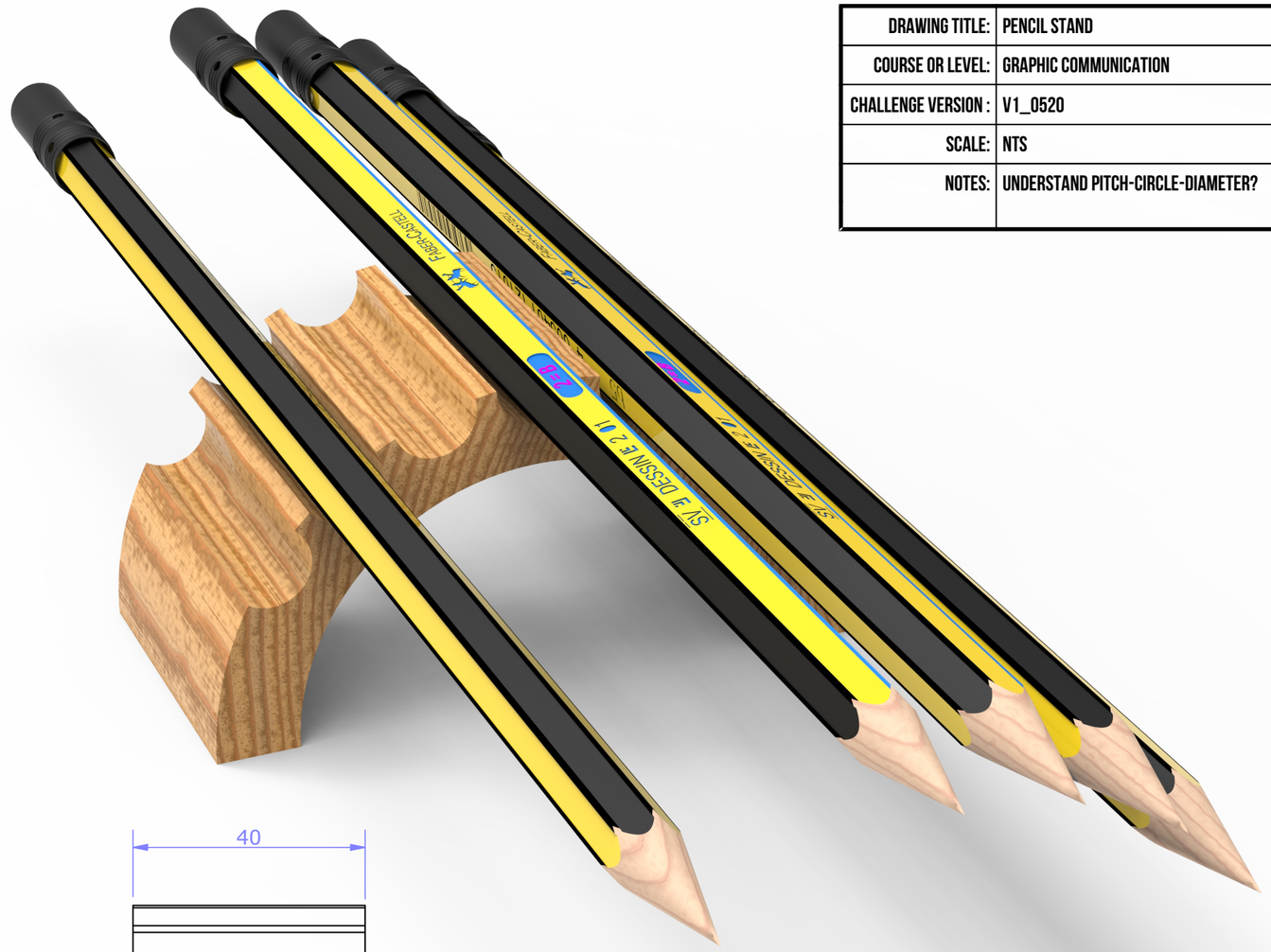

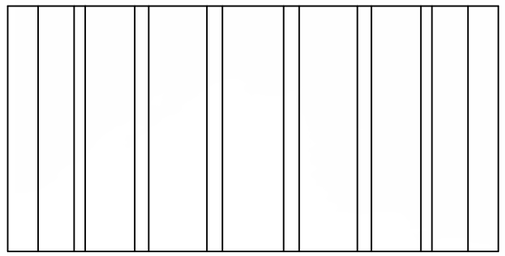

PLAN

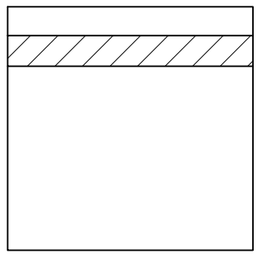

SECTION A-A

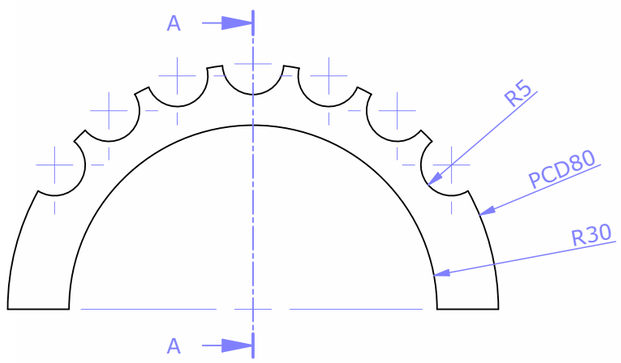

ELEVATION

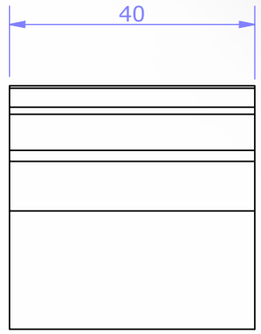

END ELEVATION