DRAWING TITLE:	PIPE
COURSE OR LEVEL:	GRAPHIC COMMUNICATION
CHALLENGE VERSION :	V1_0520
SCALE:	NTS
NOTES:	THE FLANGES ARE TRICKIER THAN YOU THINK...

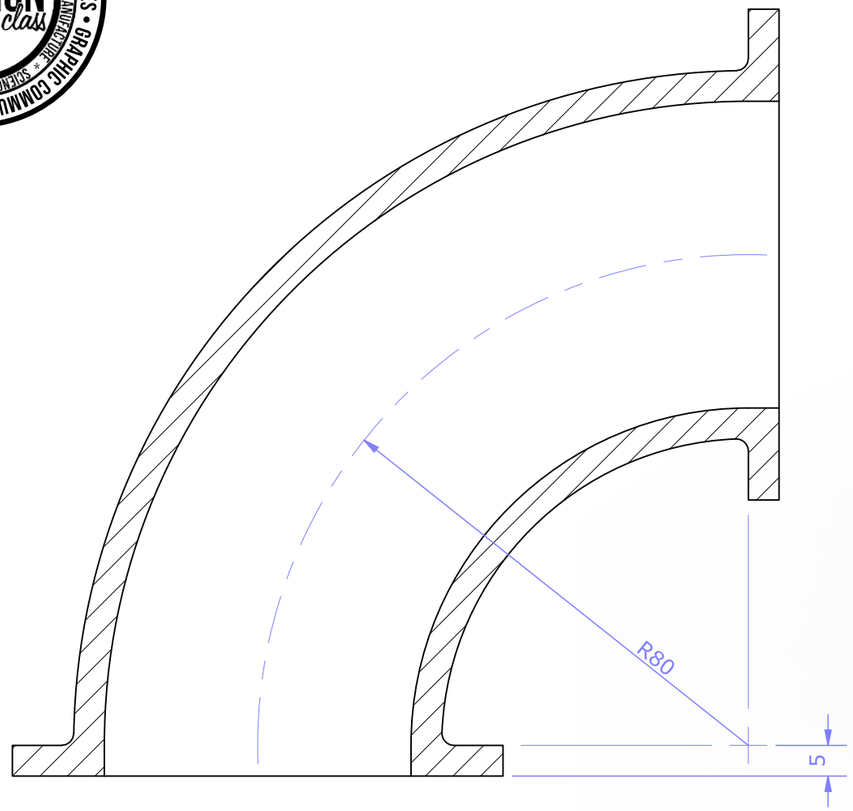

SECTION A-A

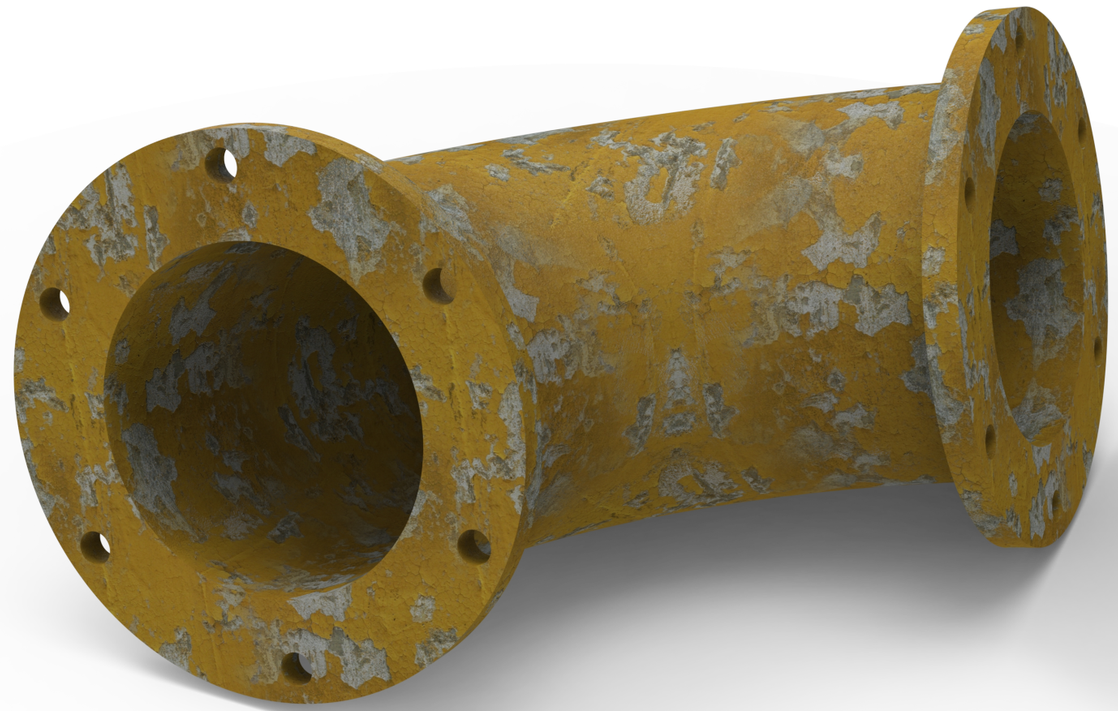

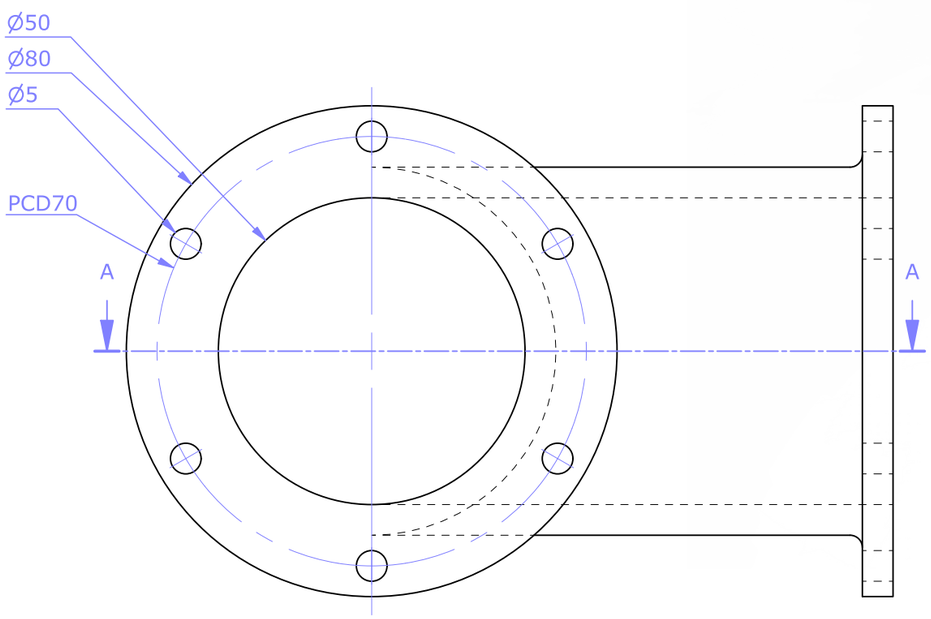

ELEVATION

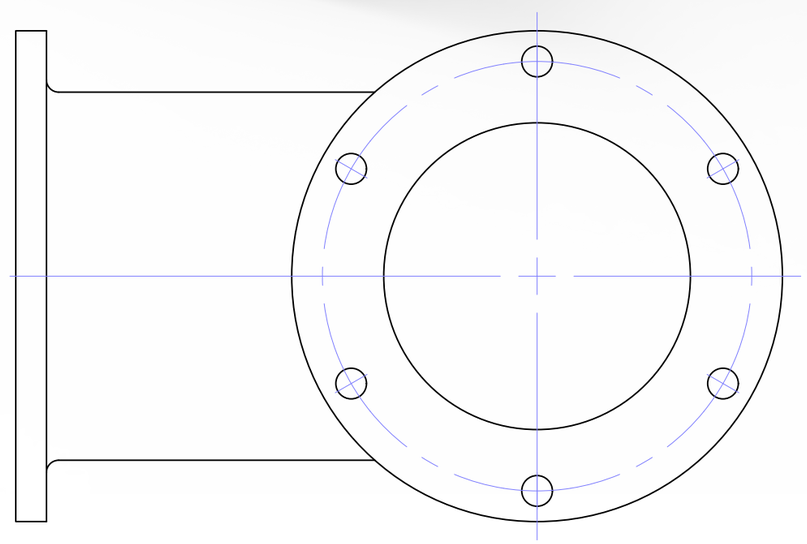

END ELEVATION