DRAWING TITLE:	METAL HOOK
COURSE OR LEVEL:	GRAPHIC COMMUNICATION
CHALLENGE VERSION :	V2_0520
SCALE:	NTS
NOTES:	YES, THIS IS MADE USING ONLY THE 'REVOLVE' FEATURE...

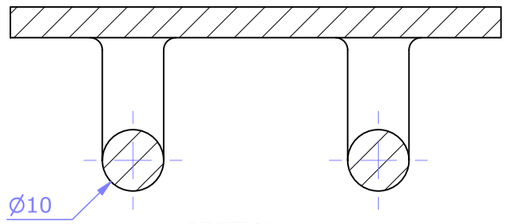

SECTION A-A

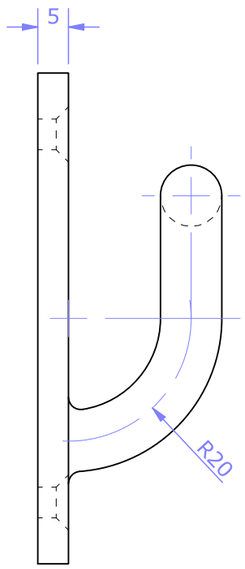

END ELEVATION

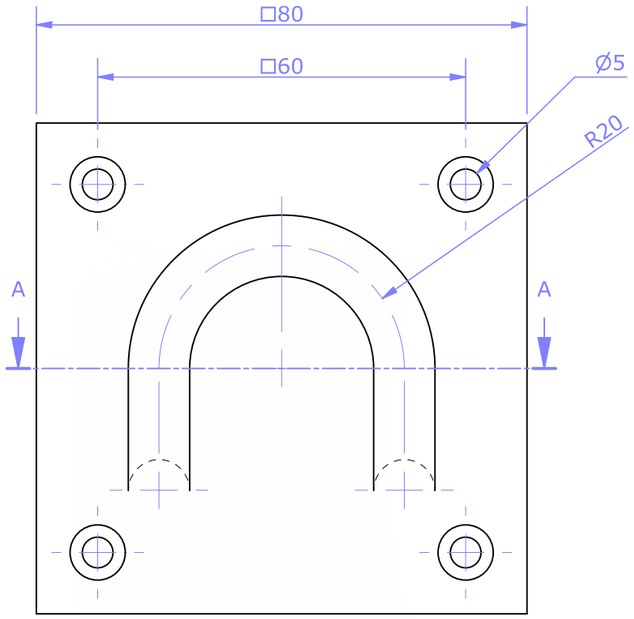

ELEVATION